ROGER TECHNOLOGY
AUTOMAZIONI EVOLUTE

THE NEW DIGITAL REVOLUTION IN THE AUTOMATION SECTOR

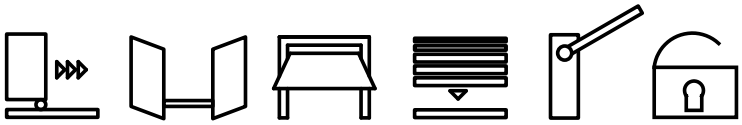

ROGER BRUSHLESS

GENERAL PRICE LIST FEBRUARY 2015

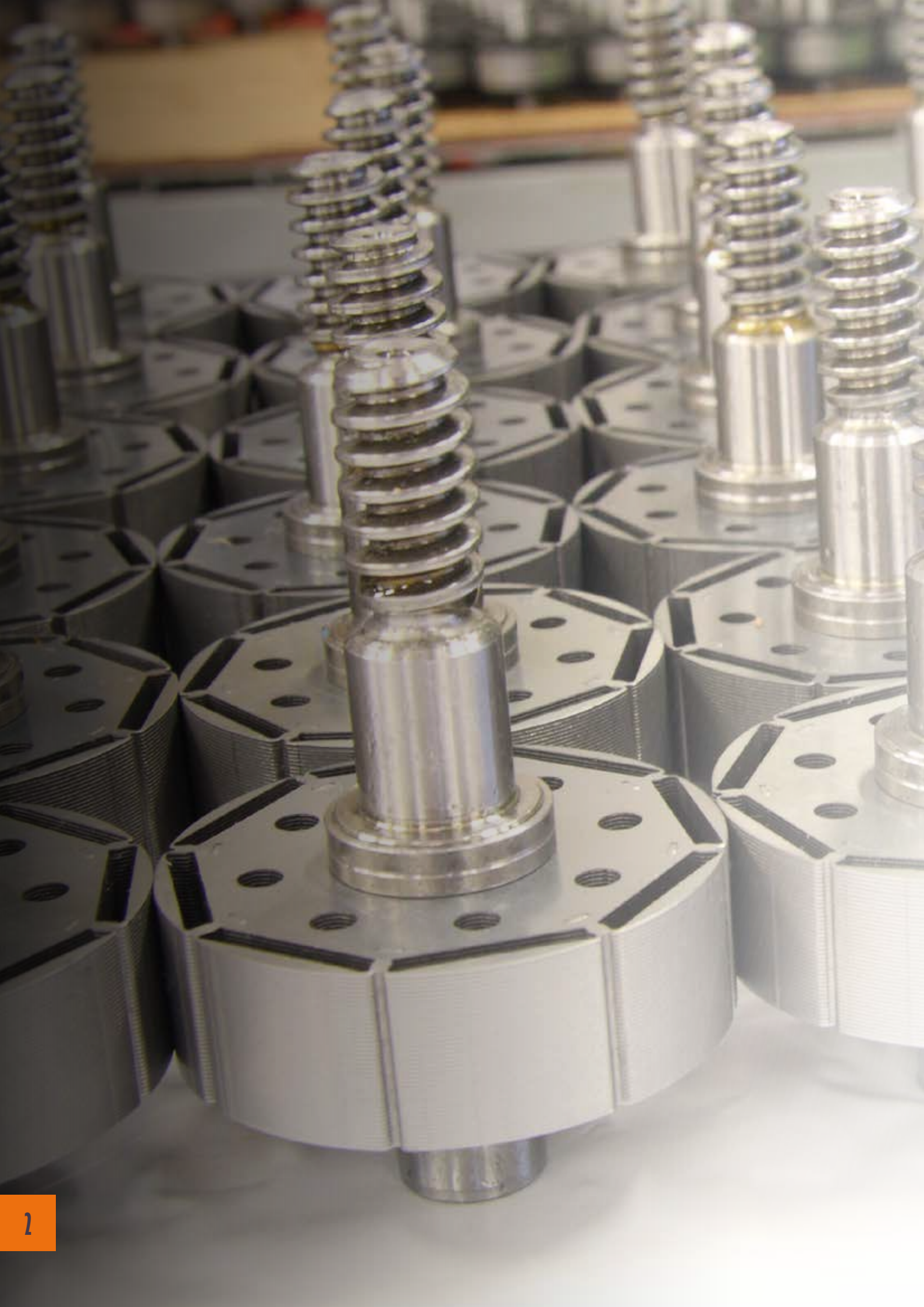

SYMBOLOGY

Sector

Residential

Commercial

Industrial

SYMBOLOGY

Products

Brushless motor on board

No limit use

Extra low consumption

Maximum digital control

Low tension

INDEX

Serie R20 - page16
Serie M20 - page18
Serie H23 - page19
Serie R21 - page20
Agilk 4 - page22
Agilk 6 - page24
B70/2DC/BOX - page26
B70/2DC115 /BOX - page26
B70/2DCHP/BOX - page26
B70/2DCHP115/BOX - page26
Kit B70/20 - page27
Kit B70/20HP - page27
CARICA BATTERIE - page 28
KIT BR20/310 - page30
KIT BR20/510 - page30
SET BM20/342 - page31
SET BH23/284 - page31
SET BR21/353 - page32

THE CHALLENGE TO THE INNOVATION

We were motivated by the thought of creating a new and highly technological solution that could revolutionise the industry and **offer the installer a great opportunity** in terms of mechanical quality. With a totally new motor and revolutionary digital electronics we designed a system to simplify the management and start up of the automation whilst ensuring that the installation can be carried out in total safety.
Our thoughts were, that after many years devoted to perfecting the electro mechanical motors, in both alternating current (AC) plus direct current (DC) that we must create something different. Especially something **that could be unique in terms of control, safety, power, intensive use and low power consumption.**
With our passion for innovation, our vast experience in mechanical production and our extensive knowledge of the elector mechanical motor, we observe the industrial world. We monitored the new ideas of the household appliance groups and imagined an automation which was completely brushless orientated with a digital permanent magnetic field and a digital control panel that provides total management of the safety features. Capable of super intensive use, but with a very low power consumption, **Roger Brushless** was created.

A new technological era that will leave a great mark in the evolution of the automation industry and lead the way for automation professionals. The combination of the three key elements: **the unique brushless motor, digital control unit and precision mechanics** express the best quality aspects of brushless technology.

THE EVOLUTION TOWARDS THE FUTURE

220V AC

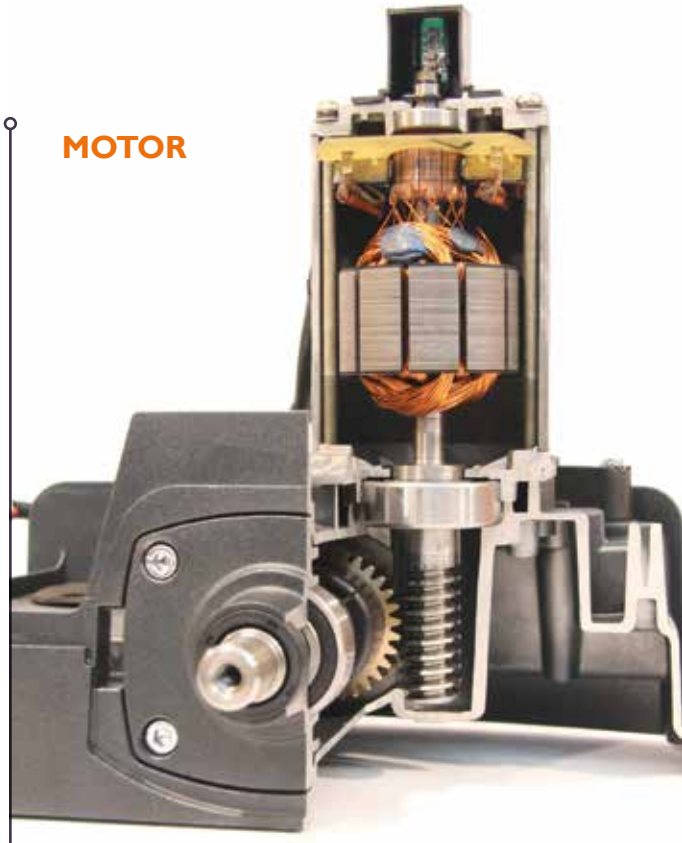

24V DC

DIGITAL MOTOR BRUSHLESS

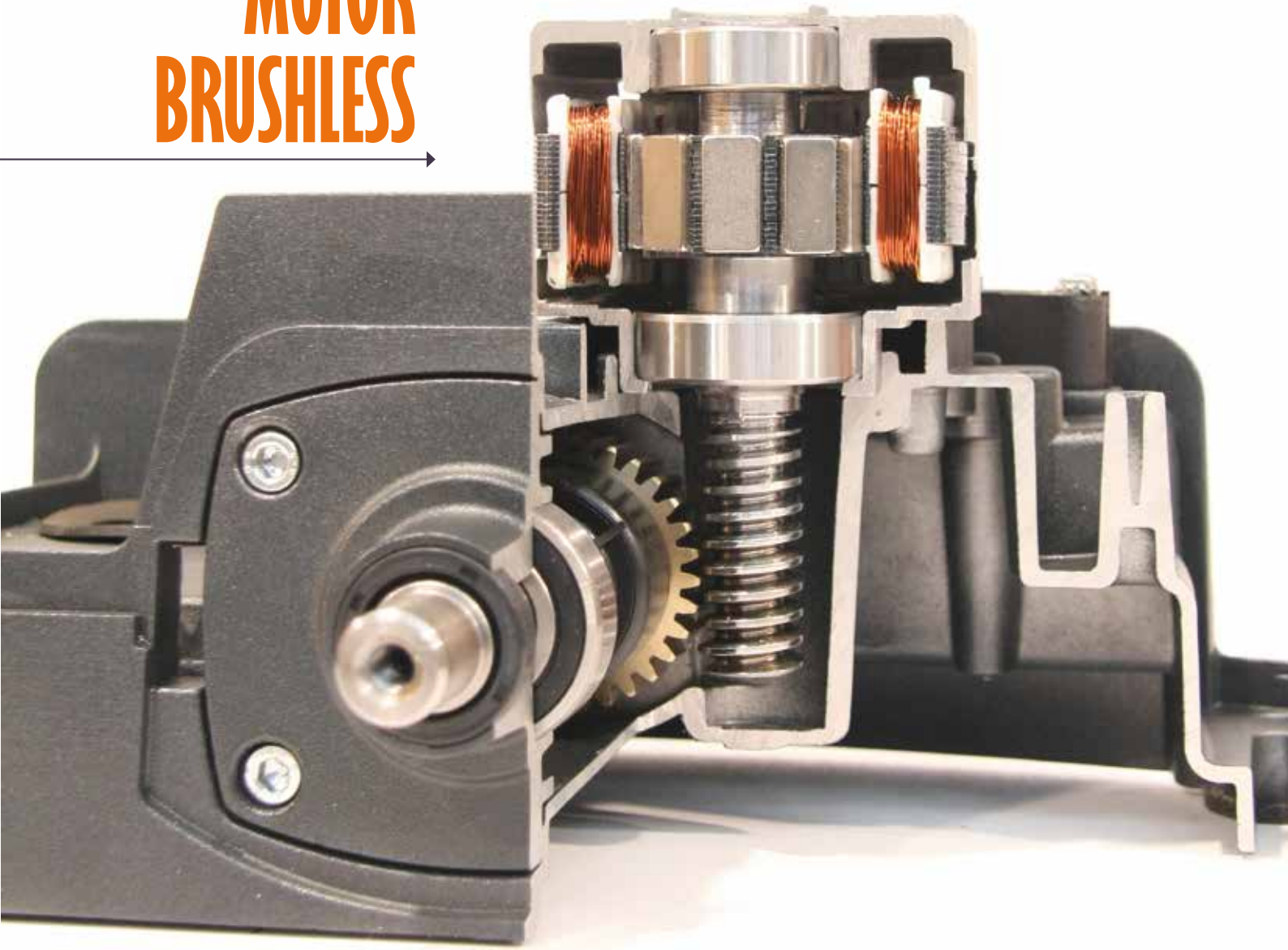

DIGITAL BRUSHLESS MOTOR

NO LIMIT USE

EXTRA LOW CONSUMPTION

MAXIMUM DIGITAL CONTROL

ROGER® BRUSHLESS

THE BRUSHLESS MOTOR

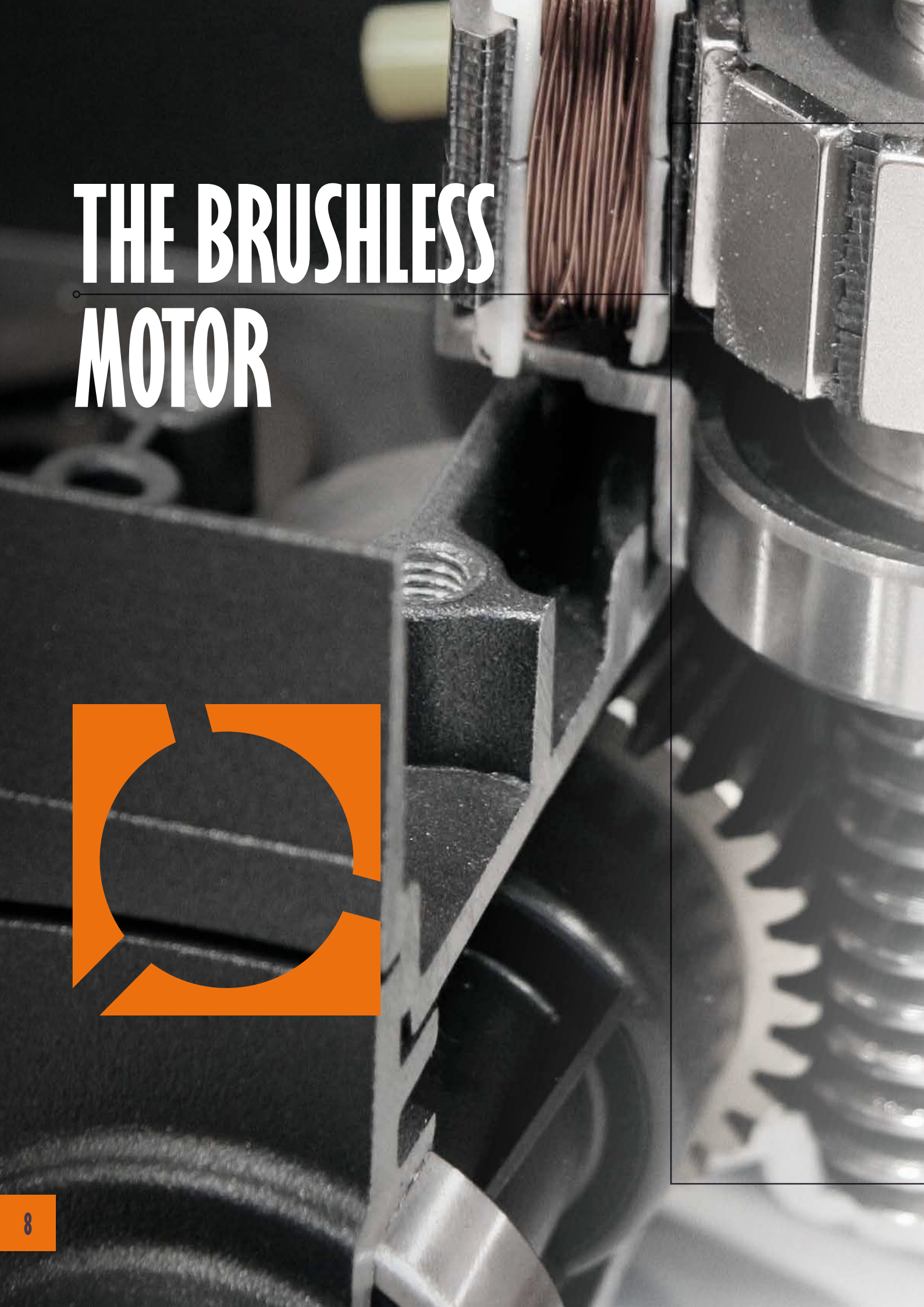

The Roger Technology "Brushless" motor is a **digital three phase motor with permanent magnetic field**.
The word **Brushless** means a motor without brushes or collector. Inside the rotor are very special neodymium magnets made from a special alloy of Iron and Boron. This technology represents an electric motor which can operate consistently under intensive permanent use. Due to its special windings and concentrated coils, the motor is powered by a three phase sinusoidal system. Available in low voltage 24V, 36V and 220V AC version, we have created and produced an extremely compact engine designed to work in temperatures of all environments. This durable and very strong motor is capable of super intensive use with the added benefit of a very low power consumption. With the addition of the digital encoder, all aspects of safety can be completely managed.

- Digital Brushless motor on board with permanent magnetic field
- Brushless motor, no brushes no collector inside the motor
- Digital three-phase motor available in low voltage
- Neodymium magnets made from a special alloy of Iron and Boron
- Evoluted digital encoder on board
- Super intensive use of the motor
- Very low consumption of energy
- Constant torque during all the stroke of the engine
- Instant inversion
- Synchronous speed
- High efficiency
- The motor works also with very hostile environment conditions
- Connection between the motor and the control unit with an unique cable with 3 wires

REVOLUTIONARY CONTROL BOARD WITH DIGITAL CONTROLLER

The refined and innovative control unit, with digital control in 24V or 36V DC field oriented. The new brushless control panel without a traditional relay and with the revolutionary Mosfet system represents the new system of electronic boards. Designed to manage all types of safety whilst monitoring the movement of the gate, this unique system will meet the needs of all professional installers in the residential, commercial and industrial door sector.

The new digital controller with field oriented sensor control will detect obstacles instantly. As well as managing the high-efficiency motor encoder, it will also monitor its strength, torque, absorption, power consumption and the precise location of the motor through all of its points. Its position in pulses is monitored between the motor and the control panel with a unique 3 core cable.

- Sinusoidal digital controller field-oriented
- Low voltage control unit 24V DC and 36V DC
- No traditionl relays in the electronic card
- Innovative quadrant mosfet circuit
- Engine data management with sersorless technology
- Management of the evolved digital encoder
- Instant obstacle detection
- Total managament control of the automation
- Instant inversion
- Work with emergency batteries
- Work with inverter and electric generator
- Separate control and management of the 2 engines

EXCELLENT MECHANICAL OF HIGH PRECISION

All mechanical components, gears, frames and every single part of the motor and related windings are completely produced and manufactured within our Italian factories. **Roger Brushless Technology is based on the traditional principles of design** using only the highest quality materials and components available to produce a product that is strong, robust and designed to last. We use aluminium for the automation frames and steel and cast iron for the gears, sometimes these are heat treated to make the product hi –tensile. An aluminium bronze threaded coupler runs along a steel worm drive producing a product designed to last.

The assembly and testing are the last stages of the manufacturing process but are substantially the most important. For this reason our company have strict guidelines to work to during the assembly and testing procedures, controlling each single product before it is ready for market.

- Carter, profiles and frames made in die-cast aluminum reinforced with titanium
- Use of First quality materials as aluminum, steel, bronze, cast iron
- Machining and finishing of the seats of the bearings in order to avoid any type of vibration
- Gears assembled with high-quality ball bearings with double-shielded
- The bearings are mounted in precise finished seats in order to obtain an absolute precision among the axes of the gears
- Rolling process of the worm screw and the shafts of the engines in order to avoid any type of porosity and to obtain cleaned surface extremely resistive
- Use of lubricants and industrial specific greases in order to give more life to all mechanical linkages
- Testing and assembly of extreme care and passion

FABBRICA AUTOMAZIONI FACTORY

Roger Technology: our manufacturing philosophy

Here at Roger Technology, we are committed to the daily challenge of coming up with new and improved solutions to ensure they are simple, functional and fit perfectly with the way you work and your desire to offer and install automation tailored to specific individual needs. All our products belong to a unique professional vision built on the cornerstones of excellent mechanics, innovative control technology and pared-back design. A formula of timeless excellence that ensures each new solution is compatible with the past, as it represents the future. A future that merges seamlessly with your requirements.

Welcome to our home

Imagine listening to the grunting of production machinery, breathing in the smell of metal or industrial grease, witnessing the complete transformation of a bar of metal into a motor shaft or a gear for your automation system. Immerse yourself in an atmosphere where feedback is valued, where we love listening to your requirements and, above all, learning from your ideas and experiences. Our factory is the place where we bring our ideas and designs to life, starting with top-quality raw materials. This is the place where we relish the daily challenge of coming up with great new designs devised to create and develop hi-tech future-oriented automation.

Assembly and quality control

All products and semifinished components produced by our two manufacturing facilities are transferred to a third facility where dedicated specially appointed lines - each assigned to a specific product category - handle the mounting and assembly stages to produce the finished product according to very strict procedures and rules put in place to ensure an exemplary result. The main added value at the mounting and assembly stage lies in the highly skilled staff who - in addition to putting the components installed through some very thorough quality control testing - are tasked with testing all assembled products, mounting them with meticulous care, ensuring the on-board electric motor is working properly and putting them in their relevant packaging after cleaning them with special protective oil.

Materials: raw VS pre-made

We love the fact that, rather than just putting parts together, we actually take the raw materials and make our own components and semifinished products. At Roger Technology, we take a bar of metal and fashion it into a gear, an aluminium ingot into a motor casing, a coil of copper into an electromechanical motor. We are one of those manufacturers who has made the choice to "go local", preferring to produce all of our components or semifinished products in-house here in Italy. We source raw materials like aluminium, steel, copper, cast iron and bronze directly fromhand-picked suppliers who exercise the utmost care and work to the highest standard of quality in adhering to the technical specifications dictated by us for each material. That way, we know the finished product we create, once installed, will give a huge return on our investment in terms of our sacrifice and the passion we put into its manufacture

Quality is an integral part of our DNA

In everything we do, we endeavour to create solutions and products that will simplify and improve your professional installation. When we come up with a new product, an idea, we're driven by a single mission: total production process quality. We choose the metallurgical properties of our metals accordingly, and it's the reason we don't use plastic: just top-quality ferrous and non-ferrous metals. And it's because we're such sticklers for quality that we grind all the seats in the aluminium housings as they come from the die-casting process, try to check and eliminate excessive clearances and install high-quality double-shielded bearings so painstakingly. And it's because we want to ensure total quality that we made the decision to produce all semifinished and finished products entirely in-house here at our facilities in Italy, managing every stage of the production process from the raw materials through to the finished products, checking them one by one so that your next installation comes with the ultimate assurance of all-Italian quality

Hats off to everyone who gives us their custom

Being a Roger Technology customer, dealer and installer means having the opportunity to play an important role in the world of automatic entry systems. Today, all our customers play a very important role that, every day, helps make our brand - one you all know (and hopefully love) - the success that it is. They are extremely passionate about our corporate culture, our great devotion to quality and, above all, value our dogged perseverance in researching and seeking out quality materials, driven by our impressive mechanical experience. We're always on the lookout for new customers who are not only familiar with the technical and sales side of our products but, above all, are willing to understand and respect our culture, manufacturing philosophy, technological creativity and, most importantly, our passion for producing only the highest quality solutions.

BRUSHLESS MOTOR

SERIE R20

PRODUCT		
Code	Product Description	Pcs/ Pallet
BR20/300	Electromechanical actuator BRUSHLESS, low voltage, super intensive use, with motor encoder onboard, irreversible, ideal for swing gates with leaf up to 2,5 mt lenght, with adjustable mechanical stopper in opening and closing	50
CONTROL UNIT		
B70/2DC/BOX	Digital controller 24V for 2 BRUSHLESS motor, with plastic box	50
B70/ 2DCHP/BOX	Digital controller 36V for 2 BRUSHLESS motor, with plastic box	50
ACCESSORIES IN COMMON WITH 230V AC LINE		
MC781	Kit mechanical stop BR20 series, R20/300MS and R20/500MS	
KT202	Short front hinge plate	
KT204	Short rear hinge plate	
KT206	Kit 3 hinge plates short series	
R99/C/001	Signboard “Automatic Opening”	

TECHNICAL FEATURES	
Power Supply	230V AC - 115V AC 50/60Hz +-10%
Brushless motor power supply	24V - 36V
Motor power	240W
Frequency of use	Super intensive use
Operating temperature	-20 +55°C
Protection level	IP43
Opening time at 90°	19” - 30”
Manoeuvre speed:	1 -1,66 cm/s
Max thrust	100 - 2800 N
Stroke	320 mm
Encoder	Digitial encoder onboard
Cycles per day (opening/closing 24h no stop)	1.300

Dimensions

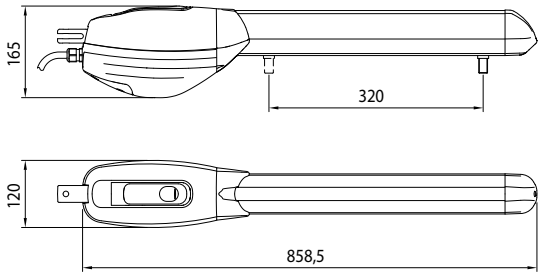

Usage limits

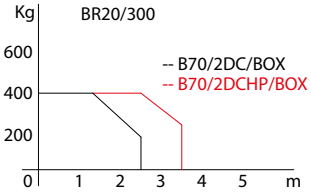

Predisposition for standard installation

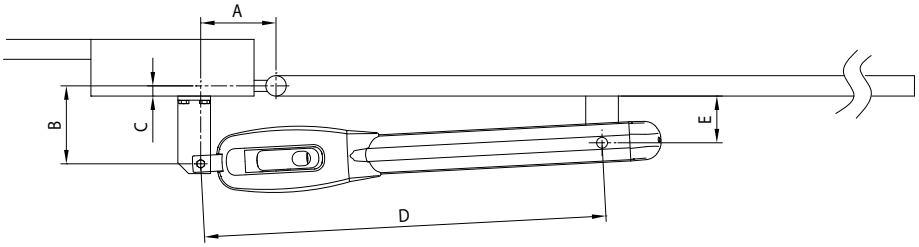

QUOTA "A" mm	QUOTA "B" mm	ANGOLO APERTURA
130	130	90°
80	170	90°
80	210	90°
100	200	90°
120	140	100°
130	150	105°
150	100	120°

QUOTA "C" MAX mm	QUOTA "D" MAX mm	QUOTA "E" mm
90	730	90

ROGER BRUSHLESS

BRUSHLESS MOTOR

BR20/500

PRODUCT		
Code	Product Description	Pcs/ Pallet
BR20/500	Electromechanical actuator BRUSHLESS, low voltage, super intensive use, with motor encoder onboard, irreversible, ideal for swing gates with leaf up to 3,5 mt lenght, with adjustable mechanical stopper in opening and closing	36
CONTROL UNIT		
B70/2DC/BOX	Digital controller 24V for 2 BRUSHLESS motor, with plastic box	50
B70/ 2DCHP/BOX	Digital controller 36V for 2 BRUSHLESS motor, with plastic box	50
ACCESSORIES IN COMMON WITH 230V AC LINE		
MC781	Kit mechanical stop BR20 series, R20/300MS and R20/500MS	
KT201	Long front hinge plate	
KT203	Long rear hinge plate	
KT205	Kit 3 hinge plates long series	
R99/C/001	Signboard “Automatic Opening”	

TECHNICAL FEATURES	
Power Supply	230V AC - 115V AC 50/60Hz +-10%
Brushless motor power supply	24V - 36V
Motor power	240W
Frequency of use	Super intensive use
Operating temperature	-20 +55°C
Protection level	IP43
Opening time at 90°	27” - 42”
Manoeuvre speed:	1 -1,66 cm/s
Max thrust	100 - 2800 N
Stroke	520 mm
Encoder	Digitial encoder onboard
Cycles per day (opening/closing 24h no stop)	1.000

Dimensions

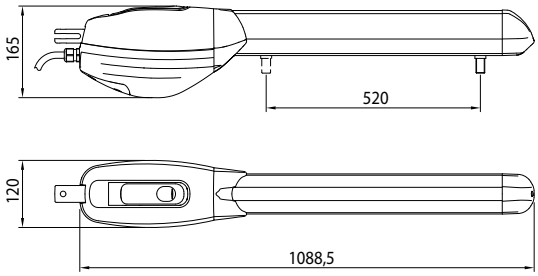

Usage limits

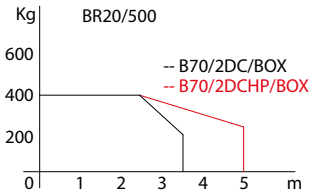

Predisposition for standard installation

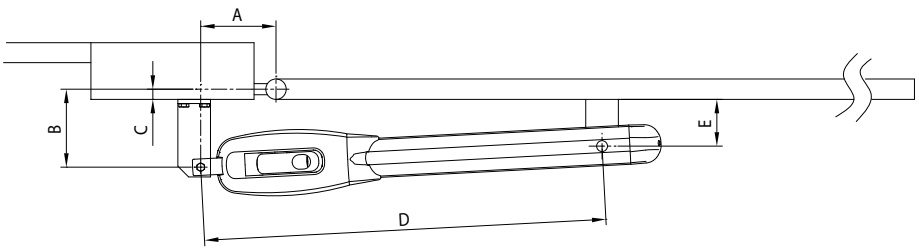

QUOTA "A" mm	QUOTA "B" mm	ANGOLO APERTURA
100	210	90°
150	210	90°
150	300	90°
250	180	110°
220	200	110°
180	130	120°
210	180	120°

QUOTA "C" MAX mm	QUOTA "D" MAX mm	QUOTA "E" mm
190	950	123

BRUSHLESS MOTOR

SERIE M20

PRODUCT		
Code	Product Description	Pcs/ Pallet
BM20/340	Electromechanical actuator BRUSHLESS, low voltage, super intensive use, with motor encoder onboard, irreversible, ideal for swing gates with leaf up to 3 mt lenght, with adjustable mechanical stopper in opening	50
CONTROL UNIT		
B70/2DC/BOX	Digital controller 24V for 2 BRUSHLESS motor, with plastic box	50
ACCESSORIES IN COMMON WITH 230V AC LINE		
MC779	Kit mechanical stop for M20 - G20 - H20 series	
KT202	Short front hinge plate	
KT204	Short rear hinge plate	
KT206	Kit 3 hinge plates short series	
R99/C/001	Signboard "Automatic Opening"	

TECHNICAL FEATURES	
Power Supply	230V AC - 115V AC 50/60Hz +-10%
Brushless motor power supply	24V
Motor power	240W
Frequency of use	Super intensive use
Operating temperature	-20 +55°C
Protection level	IP43
Opening time at 90°	19" - 30"
Manoeuvre speed:	1 -1,66 cm/s
Max thrust	100 - 2800 N
Stroke	310/340 mm
Encoder	Digitial encoder onboard
Cycles per day (opening/closing 24h no stop)	1.300

Dimensions

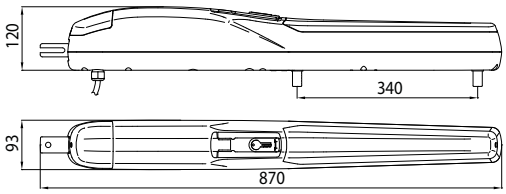

Usage limits

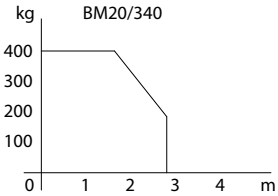

Predisposition for standard installation

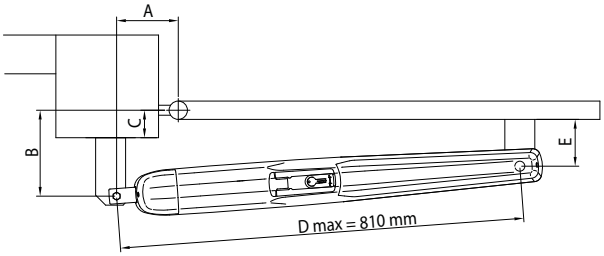

QUOTA "A" mm	QUOTA "B" mm	ANGOLO APERTURA
130	130	90°
80	170	90°
50	130	90°
100	200	90°
120	140	100°
130	150	105°
150	100	120°

QUOTA "C" max mm	QUOTA "D" max mm	QUOTA "E" mm
90	810	90

ROGER BRUSHLESS

BRUSHLESS MOTOR

SERIE H23

BH23/282

PRODUCT		
Code	Product Description	Pcs/ Pallet
BH23/282	Electromechanical articulated motor BRUSHLESS, low voltage, super intensive use, with motor encoder onboard, irreversible ideal for swing gates with leaf up to 2.8 meters of length with adjustable mechanical stopper in opening and closing and with standard version of short arms	44

CONTROL UNIT		
B70/2DC/BOX	Digital controller 24V for 2 BRUSHLESS motor, with plastic box	50

ACCESSORIES IN COMMON WITH 230V AC LINE	
LT302	Arms short for articulated motor
LT317	Arm straight short for articulated
LT318	Arm curved short for articulated
KT218	Gate pull bracket for series articulated
KT209	Plate for fixing to post H23 series
R99/C/001	Signboard “Automatic Opening”

TECHNICAL FEATURES	
Power Supply	230V AC - 115V AC 50/60Hz +-10%
Brushless motor power supply	24V
Motor power	160W
Frequency of use	Super intensive use
Operating temperature	-20 +55°C
Protection level	IP43
Opening time at 90°	12” - 20”
Max thrust	50 - 280 N
Encoder	Digitial encoder onboard
Cycles per day (opening/closing-24h no stop)	1.900

Dimensions

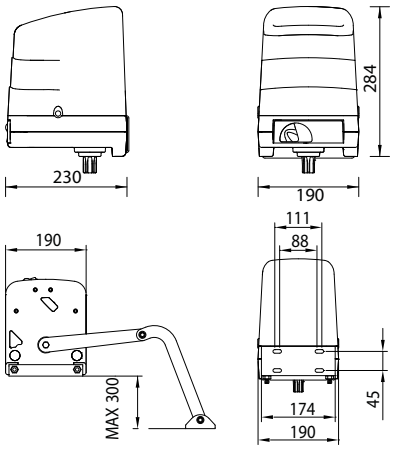

Usage limits

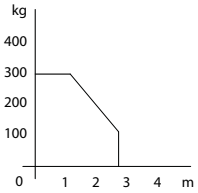

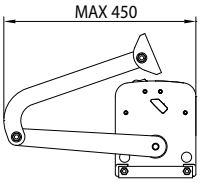

Predisposition for standard installation

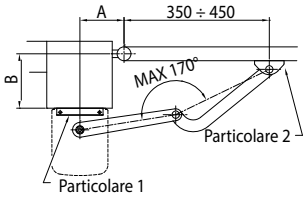

QUOTA "A" mm	QUOTA "B" mm	ANGOLO APERTURA
130	50	90°
130	80	90°
130	100	90°
140	120	90°
150	50	95°
160	160	95°
180	180	95°
180	200	100°
200	200	100°
230	200	105°
250	250	105°
300	250	110°

ROGER TECHNOLOGY
AUTOMAZIONI EVOLUTE

BRUSHLESS MOTOR

SERIE R21

PRODUCT		
Code	Product Description	Pcs/ Pallet
BR21/351	Electromechanical underground motor, BRUSHLESS, low voltage, super intensive use, with motor encoder onboard, irreversible, ideal for swing gates with leaf up to 3,5 mt; standard version with2 mt cable	50
CONTROL UNIT		
B70/2DC/BOX	Digital controller 24V for 2 BRUSHLESS motor, with plastic box	50
B70/ 2DCHP/BOX	Digital controller 36V for 2 BRUSHLESS motor, with plastic box	50
ACCESSORIES IN COMMON WITH 230V AC LINE		
FU100	Cold galvanised foudation box and lid	30
FU101	Hot galvanised foundation box and lid	30
FU102	Hot galvanised foundation box and inox lid	30
FU103	Inox AISI 304 foundation box and lid	30
KT207	Standard installation accessories series R21	
KT229	Standard installation accessories series R21 (FU103 INOX)	
LT300	Levers for opening up to 125°	
LT301	Levers for opening up to 360°	
RL650	Release system with standard lever	
RL651	Release system with european cylinder key	
RL652	Standard release lever for underground	
RL663	Long release lever for underground	
R99/C/001	Signboard “Automatic Opening”	

TECHNICAL FEATURES	
Power Supply	230V AC - 115V AC 50/60Hz +-10%
Brushless motor power supply	24V - 36V
Motor power	200W
Frequency of use	Super intensive use
Operating temperature	-20 +55°C
Protection level	IP67
Opening time at 90°	19” - 29”
Manoeuvre speed:	1,66 cm/s
Max thrust	50 - 300 N
Standard opening	105°
Encoder	Digitial encoder onboard
Cycles per day (opening/closing 24h no stop)	1.300

Dimensions

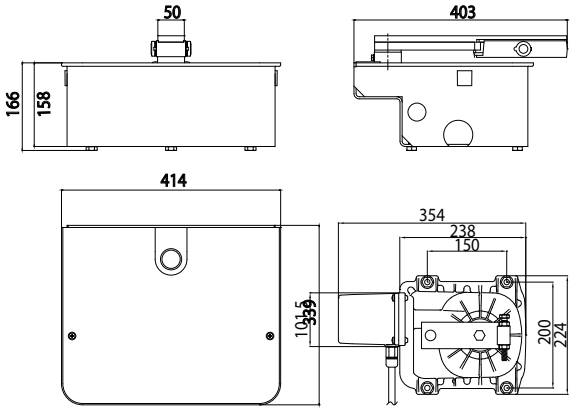

Usage limits

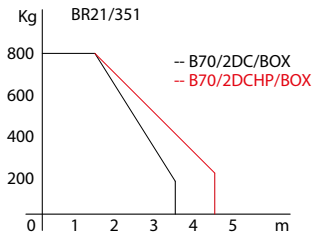

ROGER BRUSHLESS

BRUSHLESS MOTOR

BR21/361 - BR21/362

PRODUCT		
Code	Product Description	Pcs/ Pallet
BR21/361	Electromechanical underground motor, BRUSHLESS, low voltage, super intensive use, with motor encoder onboard, irreversible, ideal for swing gates with leaf up to 3,5 mt; standard version with 10 mt cable	50
BR21/362	Electromechanical underground motor, BRUSHLESS, low voltage, super intensive use, with motor encoder onboard, irreversible, ideal for swing gates with leaf up to 3,5 mt; tandem version with double bearing with 10 mt cable	50
CONTROL UNIT		
B70/2DC/BOX	Digital controller 24V for 2 BRUSHLESS motor, with plastic box	50
B70/ 2DCHP/BOX	Digital controller 36V for 2 BRUSHLESS motor, with plastic box	50
ACCESSORIES IN COMMON WITH 230V AC LINE		
FU100	Cold galvanised foudation box and lid	30
FU101	Hot galvanised foundation box and lid	30
FU102	Hot galvanised foundation box and inox lid	30
FU103	Inox AISI 304 foundation box and lid	30
KT207	Standard installation accessories series R21	
KT229	Standard installation accessories series R21 (FU103 INOX)	
LT300	Levers for opening up to 125°	
LT301	Levers for opening up to 360°	
RL650	Release system with standard lever	
RL651	Release system with european cylinder key	
RL652	Standard release lever for underground	
RL663	Long release lever for underground	
R99/C/001	Signboard “Automatic Opening”	

TECHNICAL FEATURES	
Power Supply	230V AC - 115V AC 50/60Hz +-10%
Brushless motor power supply	24V - 36V
Motor power	200W
Frequency of use	Super intensive use
Operating temperature	-20 +55°C
Protection level	IP67
Opening time at 90°	19” - 29”
Manoeuvre speed:	1,66 cm/s
Max thrust	50 - 300 N
Standard opening	105°
Encoder	Digitial encoder onboard
Cycles per day (opening/closing 24h no stop)	1.300 (both)

Dimensions

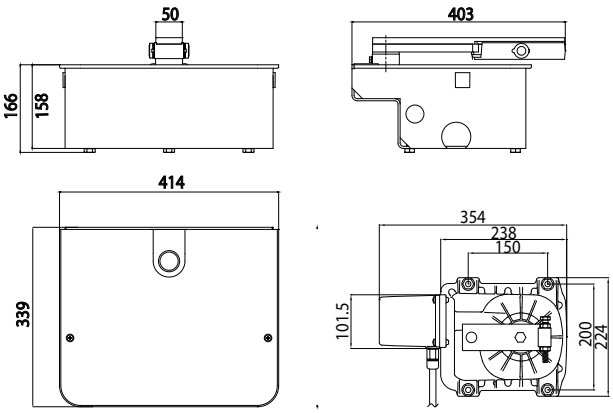

Usage limits

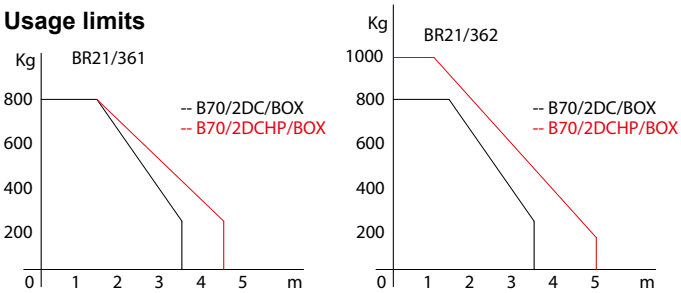

Particular double bearing in the main shaft BR21/362

ROGER TECHNOLOGY
AUTOMAZIONI EVOLUTE

BRUSHLESS MOTOR

AGILIK 4

PRODUCT		
Code	Product Description	Pcs/ Pallet
AG/004	Digital Automatic Barrier Agilik 4 Brushless 36V DC super intensive use up to 4 meters, with operator and built-in digital control panel and absolute encoder on board	6
AG/004/115V	Digital Automatic Barrier Agilik 4 Brushless 36V DC super intensive use up to 4 meters, with operator and built-in digital control panel and absolute encoder on board; for power supply 115V	6

TECHNICAL FEATURES	
Barriers	Up to 4 mt long
Frequency of use	Super intensive use
Travel control system	Digital Encoder Absolute Encoder
Power Supply	230V AC - 115V AC 50/60Hz +-10%
Brushless motor power supply	From 0 to 36V DC
Motor absorption	From 0 to 15A
Motor power	200W
Torque at the gear	From 0 to 200 Nm
Opening - closing time at 90°	2 ÷ 6 (sec)
Operating temperature	- 20 + 55 C°
Accessories power supply	24V DC
Control unit (built-in)	Digital Controller 36V DC
Release system	European Key cylinder
Batteries recovery	Available (optional)
Cycles per day (opening/closing 24h no stop)	5.000 (both)

Dimensions

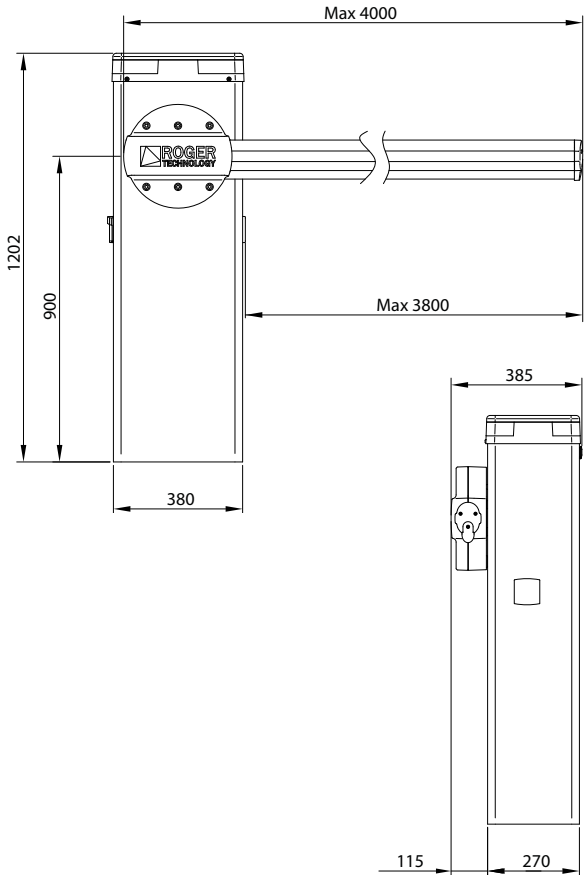

ROGER BRUSHLESS

ACCESSORIES

	AG/SP72/01	Balancing spring diameter 72 mm; for bar up to 4 meters
	AG/BLED	Flashing light circuit with 4 led cards for the head of the barriers Agilik
	AG/ALED6C	Luminous led cord of 6 meters for bar up to 3 meters with connection cable
	AG/ALED8C	Luminous led cord of 8 meters for bar up to 4 meters with connectio cable
	AG/BA3/01	White painted elliptic aluminium bar 3 meters lenght with slot cover and impact resisteng rubber profile
	AG/BA4/01	White painted elliptic aluminium bar 4 meters lenght with slot cover and impact resisteng rubber profile
	AG/BAJ/02	Joint at 90° for elliptic tubular aluminium bar up to 3 m lenght
	AG/BARK/02	Painted aluminium rack for bars. Modules of 2 m lenght
	AG/BAFS/01	Fixed support for bars
	AG/BAFS/02	Adjustable fixed support for bars
	AG/BAFS/03	Fixing support with bolt predisposition for bars
	AG/BAFS/04	Adjustable fixed support with predisposition to bolt for bars
	AG/BAMS/01	Mobile support for bars
	AG/BAJ/01	Internal boom bar joint in anodized aluminum including fixing screws for bars Agilik series
	KT230	Foundation plate for the ground fixing with fixing screws and bolts
	KT231	Foundation plate for fixing support for bars
	AG/BASB40	Package of 40 red adhesive refracting strip

ROGER TECHNOLOGY
AUTOMAZIONI EVOLUTE

BRUSHLESS MOTOR

AGILIK 6

PRODUCT		
Code	Product Description	Pcs/ Pallet
AG/006	Digital Automatic Barrier Agilik 6 Brushless 36V DC super intensive use up to 6 meters, with operator and and built-in digital control panel and absolute encoder on board	6
AG/006/115V	Digital Automatic Barrier Agilik 6 Brushless 36V DC super intensive use up to 6 meters, with operator and built-in digital control panel and absolute encoder on board for power supply 115V	6

TECHNICAL FEATURES	
Barriers	Up to 6 mt long
Frequency of use	Super intensive use
Travel control system	Digital Encoder Absolute Encoder
Power Supply	300V AC - 115V AC 50/60Hz +-10%
Brushless motor power supply	From 0 to 36V DC
Motor absorption	From 0 to 15A
Motor power	200W
Torque at the gear	From 0 to 300 Nm
Opening - closing time at 90°	4 ÷ 8 (sec)
Operating temperature	- 20 + 55 C°
Accessories power supply	24V DC
Control unit (built-in)	Digital Controller 36V DC
Release system	European Key cylinder
Batteries recovery	Available (optional)
Cycles per day (opening/closing 24h no stop)	4.000 (both)

Dimensions

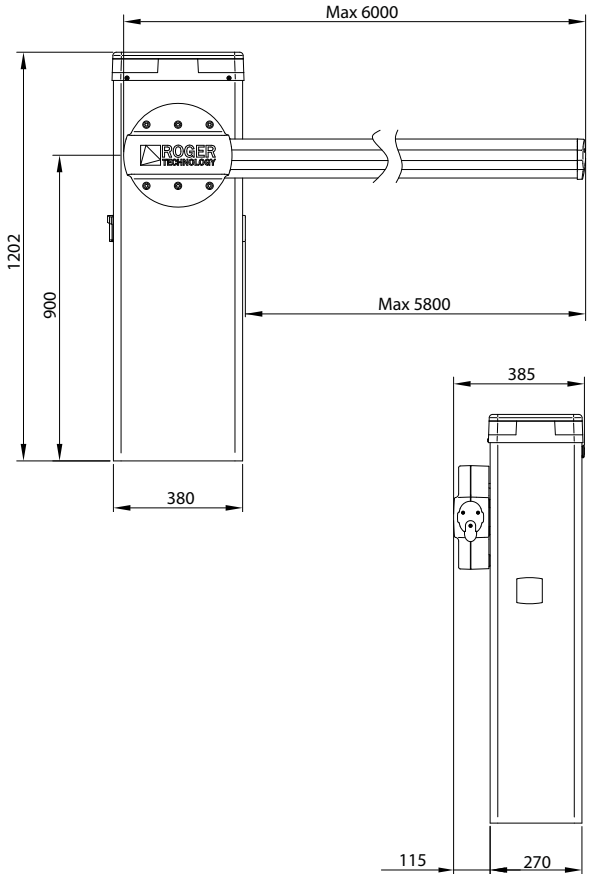

ROGER BRUSHLESS

ACCESSORIES

	AG/SP83/01	Balancing spring diameter 83 mm; for bar from 4 meters to 6 meters
	AG/BLED	Flashing light circuit with 4 led cards for the head of the barriers Agilik
	AG/ALED12C	Luminous led cord of 6 meters for bar up to 12 meters with connection cable
	AG/BA2/01	White painted elliptic aluminium bar 2 meters lenght with slot cover and impact resisteng rubber profile
	AG/BA4/01	White painted elliptic aluminium bar 4 meters lenght with slot cover and impact resisteng rubber profile
	AG/BA6/01	White painted elliptic aluminium bar 6 meters lenght with slot cover and impact resisteng rubber profile
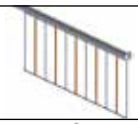	**AG/BARK/02**	Painted aluminium rack for bars. Modules of 2 m lenght
	AG/BAFS/01	Fixed support for bars
	AG/BAFS/02	Adjustable fixed support for bars
	AG/BAFS/03	Fixing support with bolt predisposition for bars
	AG/BAFS/04	Adjustable fixed support with predisposition to bolt for bars
	AG/BAMS/01	Mobile support for bars
	AG/BAJ/01	Internal boom bar joint in anodized aluminum including fixing screws for bars Agilik series
	KT230	Foundation plate for the ground fixing with fixing screws and bolts
	KT231	Foundation plate for fixing support for bars
	AG/BASB40	Package of 40 red adhesive refracting strip

DIGITAL CONTROLLER FOR 2 BRUSHLESS MOTOR

B70/2DC/BOX

PRODUCT		
Code	Product Description	Pcs/ Pallet
B70/2DC/BOX	Digital controller 24V for 2 BRUSHLESS motor, with plastic box	50

B70/2DC115/BOX

PRODUCT		
Code	Product Description	Pcs/ Pallet
B70/2DC115/BOX	Digital controller 24V for 2 BRUSHLESS motor, with plastic box; power supply 115V	50

B70/2DCHP/BOX

PRODUCT		
Code	Product Description	Pcs/ Pallet
B70/2DCHP/BOX	Digital controller 36V for 2 BRUSHLESS motor, with plastic box	50

B70/2DCHP115/BOX

PRODUCT		
Code	Product Description	Pcs/ Pallet
B70/2DCHP115/BOX	Digital controller 36V for 2 BRUSHLESS motor, with plastic box; power supply 115V	50

ROGER BRUSHLESS

KIT DIGITAL CONTROLLER FOR 2 BRUSHLESS MOTOR

KIT B70/20

PRODUCT		
Code	Product Description	Pcs/ Pallet
KIT B70/20	Electronic kit with digital controller 24V B70/2DC/BOX for 2 BRUSHLESS motor	49
KIT COMPOSITION		
N. 1 - B70/2DC/BOX	Digital controller 24V for 2 BRUSHLESS motor, with plastic box	
N. 1 - H93/RX22A/I	Plug-in receiver 2 channels 433,92 Mhz for control unit series H70, B70 e AG/CTRL	
N. 2 - E80/TX52R/2	Fix code transmitter 433,92 Mhz 2 channels, with radio for copy	
N. 1 - R90/F4ES	Pair of external photocells synchronized 24V AC/DC (max. 4 pairs)	
N. 1 - R92/LED24	LED flashing light series R92 24V	
N. 1 - R91/AN1/LR1	Antenna for flashing light R92 series	
N. 1 - R99/C/001	Signboard “Automatic Opening”	

KIT B70/20HP

PRODUCT		
Code	Product Description	Pcs/ Pallet
KIT B70/20HP	Electronic kit with digital controller 36V B70/2DCHP/BOX for 2 BRUSHLESS motor	49
KIT COMPOSITION		
N. 1 - B70/2DCHP/BOX	Digital controller 36V for 2 BRUSHLESS motor, with plastic box	
N. 1 - H93/RX22A/I	Plug-in receiver 2 channels 433,92 Mhz for control unit series H70, B70 e AG/CTRL	
N. 2 - E80/TX52R/2	Fix code transmitter 433,92 Mhz 2 channels, with radio for copy	
N. 1 - R90/F4ES	Pair of external photocells synchronized 24V AC/DC (max. 4 pairs)	
N. 1 - R92/LED24	LED flashing light series R92 24V	
N. 1 - R91/AN1/LR1	Antenna for flashing light R92 series	
N. 1 - R99/C/001	Signboard "Automatic Opening"	

EMERGENCY BATTERIES CHARGERS AND FOR BRUSHLESS DIGITAL CONTROLLER

BRUSHLESS Digital Controller 24V DC B70/2DC/BOX

PRODUCT		
Code	Product Description	Pcs/ Pallet
B71/BC/INT	Kit for emergency batteries charger for brushless digital controller B70/2DC/BOX 24v DC with plug-in card, with 2 recovery batteries 12V DC, 1.2 Ah; Box case included	-
B71/BC/BOX	Kit for emergency batteries charger for brushless digital controller B70/2DC/BOX 24V DC; Box case included and without recovery batteries	-
B71/BC/EXT	External kit for emergency batteries charger for brushless digital controller B70/2DC/BOX 24V DC with plug-in card, with 2 recovery batteries 12V DC, 4.5 Ah; Box case included	-

B71/BC/INT

B71/BC/BOX

B71/BC/EXT

BRUSHLESS Digital Controller 36V DC B70/2DCHP/BOX

PRODUCT		
Code	Product Description	Pcs/ Pallet
B71/BCHP/EXT	Kit for emergency batteries charger for brushless digital controller B70/2DCHP/BOX 36V DC with plug-in card, with 2 recovery batteries 12V DC, 4.5 Ah. Box case included	-
B71/BCHP/BOX	Kit for emergency batteries charger for brushless digital controller B70/2DCHP/BOX 36V DC with plug-in card. Box case included and without recovery batteries	-

B71/BCHP/EXT

B71/BCHP/BOX

BRUSHLESS Digital Controller 36V DC AG/CTRL FOR AUTOMATIC BARRIER SERIES AGILIK

PRODUCT		
Code	Product Description	Pcs/ Pallet
AG/BAT/KIT	Kit for emergency batteries charger for brushless digital controller AG/CTRL 36V DC with plug-in card, with 2 recovery batteries 12V DC, 4.5 Ah; Box case included with support bracket	-
AG/BAT/BOX	Kit for emergency batteries charger for brushless digital controller AG/CTRL 36V DC with plug-in card; Box case included and without recovery batteries	-

AG/BAT/KIT

AG/BAT/BOX

KIT BRUSHLESS MOTOR

KIT BR20/310

PRODUCT		
Code	Product Description	Pcs/ Pallet
KIT BR20/310	KIT Electromechanical actuator BRUSHLESS, low voltage, super intensive use, with motor encoder onboard, irreversible, ideal for swing gates with leaf up to 2,5 mt lenght, with adjustable mechanical stopper in opening and closing	21
KIT COMPOSITION		
N. 2 - BR20/300	Electromechanical actuator BRUSHLESS, low voltage, super intensive use, with motor encoder onboard, irreversible, ideal for swing gates with leaf up to 2,5 mt lenght, with adjustable mechanical stopper in opening and closing	
N. 1 - B70/2DC/BOX	Digital controller 24V for 2 BRUSHLESS motor, with plastic box	
N. 1 - H93/RX22A/I	Plug-in receiver 2 channels 433,92 Mhz for control unit series H70, B70 e AG/CTRL	
N. 1 - R90/F4ES	Pair of external photocells synchronized 24V AC/DC (max. 4 pairs)	
N. 2 - E80/TX52R/2	Fix code transmitter 433,92 Mhz 2 channels, with radio for copy	
N. 1 - R92/LED24	LED flashing light series R92 24V	
N. 1 - R91/AN1/LR1	Antenna for flashing light R92 series	
N. 1 - R99/C/001	Signboard “Automatic Opening”	

KIT BR20/510

PRODUCT		
Codice	Descrizione	Pz/ Pallet
KIT BR20/510	KIT Electromechanical actuator BRUSHLESS, low voltage, super intensive use, with native encoder onboard, irreversible, ideal for swing gates with leaf up to 3,5 mt lenght, with adjustable mechanical stopper in opening and closing	18
KIT COMPOSITION		
N. 2 - BR20/500	Electromechanical actuator BRUSHLESS, low voltage, super intensive use, with native encoder onboard, irreversible, ideal for swing gates with leaf up to 3,5 mt lenght, with adjustable mechanical stopper in opening and closing	
N. 1 - B70/2DC/BOX	Digital controller 24V for 2 BRUSHLESS motor, with plastic box	
N. 1 - H93/RX22A/I	Plug-in receiver 2 channels 433,92 Mhz for control unit series H70, B70 e AG/CTRL	
N. 1 - R90/F4ES	Pair of external photocells synchronized 24V AC/DC (max. 4 pairs)	
N. 2 - E80/TX52R/2	Fix code transmitter 433,92 Mhz 2 channels, with radio for copy	
N. 1 - R92/LED24	LED flashing light series R92 24V	
N. 1 - R91/AN1/LR1	Antenna for flashing light R92 series	
N. 1 - R99/C/001	Signboard "Automatic Opening"	

ROGER BRUSHLESS

KIT BRUSHLESS MOTOR

SET BM20/342

PRODUCT		
Code	Product Description	Pcs/ Pallet
SET BM20/342	SET Electromechanical actuator BRUSHLESS, low voltage, super intensive use, with motor encoder onboard, irreversible, ideal for swing gates with leaf up to 3 mt lenght, with adjustable mechanical stopper in opening	
SET COMPOSITION		
N. 2 - BM20/340	Electromechanical actuator BRUSHLESS, low voltage, super intensive use, with motor encoder onboard, irreversible, ideal for swing gates with leaf up to 3 mt lenght, with adjustable mechanical stopper in opening	
N. 1 - KIT B70/20	Electronic kit with digital controller 24V B70/2DC/BOX for 2 BRUSHLESS motor	
KIT COMPOSITION	**KIT B70/20**	
N. 1 - B70/2DC/BOX	Digital controller 24V for 2 BRUSHLESS motor, with plastic box	
N. 1 - H93/RX22A/I	Plug-in receiver 2 channels 433,92 Mhz for control unit series H70, B70 e AG/CTRL	
N. 2 - E80/TX52R/2	Fix code transmitter 433,92 Mhz 2 channels, with radio for copy	
N. 1 - R90/F4ES	Pair of external photocells synchronized 24V AC/DC (max. 4 pairs)	
N. 1 - R92/LED24	LED flashing light series R92 24V	
N. 1 - R91/AN1/LR1	Antenna for flashing light R92 series	
N. 1 - R99/C/001	Signboard “Automatic Opening”	

SET BH23/284

PRODUCT		
Code	Product Description	Pcs/ Pallet
SET BH23/284	SET Electromechanical articulated motor BRUSHLESS, low voltage, super intensive use, with motor encoder onboard, irreversible ideal for swing gates with leaf up to 2.8 meters of length, with adjustable mechanical stopper in opening and closing and with standard version of short arms	
SET COMPOSITION		
N. 2 - BH23/282	Electromechanical articulated motor BRUSHLESS, low voltage, super intensive use, with motor encoder onboard, irreversible ideal for swing gates with leaf up to 2.8 meters of length. with adjustable mechanical stopper in opening and closing and with standard version of short arms	
N. 1 - KIT B70/20	Electronic kit with digital controller 24V B70/2DC/BOX for 2 BRUSHLESS motor	
KIT COMPOSITION	**KIT B70/20**	
N. 1 - B70/2DC/BOX	Digital controller 24V for 2 BRUSHLESS motor, with plastic box	
N. 1 - H93/RX22A/I	Plug-in receiver 2 channels 433,92 Mhz for control unit series H70, B70 e AG/CTRL	
N. 2 - E80/TX52R/2	Fix code transmitter 433,92 Mhz 2 channels, with radio for copy	
N. 1 - R90/F4ES	Pair of external photocells synchronized 24V AC/DC (max. 4 pairs)	
N. 1 - R92/LED24	LED flashing light series R92 24V	
N. 1 - R91/AN1/LR1	Antenna for flashing light R92 series	
N. 1 - R99/C/001	Signboard “Automatic Opening”	

ROGER TECHNOLOGY
AUTOMAZIONI EVOLUTE

KIT BRUSHLESS MOTOR

SET BR21/353

PRODUCT		
Code	Product Description	Pcs/ Pallet
SET BR21/353	SET Electromechanical underground motor, BRUSHLESS, low voltage, super intensive use, with motor encoder onboard, irreversible, ideal for swing gates with leaf up to 3,5 mt. Standard version with 2 mt cable	

SET COMPOSITION	
N. 2 - BR21/351	Electromechanical underground motor, BRUSHLESS, low voltage, super intensive use, with motor encoder onboard, irreversible, ideal for swing gates with leaf up to 3,5 mt. Standard version with 2 mt cable
N. 2 - FU100	Cold galvanised foudation box and lid
N. 2 - RL650	Release system with standard lever
N. 1 - KIT B70/20HP	Electronic kit with digital controller 36V B70/2DCHP/BOX for 2 BRUSHLESS motor
KIT COMPOSITION	**KIT B70/20HP**
N. 1 - B70/2DCHP/BOX	Digital controller 36V for 2 BRUSHLESS motor, with plastic box
N. 1 - H93/RX22A/I	Plug-in receiver 2 channels 433,92 Mhz for control unit series H70, B70 e AG/CTRL
N. 1 - R90/F4ES	Pair of external photocells synchronized 24V AC/DC (max. 4 pairs)
N. 2 - E80/TX52R/2	Fix code transmitter 433,92 Mhz 2 channels, with radio for copy
N. 1 - R92/LED24	LED flashing light series R92 24V
N. 1 - R91/AN1/LR1	Antenna for flashing light R92 series
N. 1 - R99/C/001	Signboard “Automatic Opening”

FOR ACCESSORIES REGARDING KIT AND SET VISIT THE RELATED PRODUCT CODES

ROGER BRUSHLESS

NEW LABEL DESIGN

The new **brand Roger Brushless** identifies the revolutionary new line of high-tech automation signed by the Italian company **Roger Technology**.
The **revolutionary brushless motor on board**, the new digital control unit allow the installation of automations with super intensive use, with extremely low power consumption and with a **total digital management** in order to meet all the needs of the residential, commercial and industrial sector.

AZIENDA ITALIANA

PRICE LIST GENERAL SALES TERMS

INTRODUCTION TO CONDITIONS

These conditions of sale supersede all previous conditions and are automatically applied to all orders and order confirmations that the customer concludes for Roger Technology brand products or any other trademark owned by Roger Technology. All sales to the client are governed by these conditions of sale being integral part of the sale agreement and supersede and cancel any contrary or different or special agreement clause contained in the order or other document by the client. Roger Technology reserves the right to make any changes without notice aimed at
functional improvement and quality of its products.

ORDERS

All orders are subject to their availability and various technical modifications or production. Roger Technology reserves the right to accept or not, all or part of the customer orders on the basis of their conformity or otherwise of these terms and conditions and availability of required products. Roger Technology reserves the right to make technical or production modifications at any time to products without customers making any claims.

PRICE LIST

The products are sold by Roger Technology in reference to the price list in force at the time of confir-mation of order and its delivery. The customer agrees to accept unreservedly any changes in the price list that took place between the order and delivery of the product. The current price list supersedes all previous price lists. All list prices are quoted ex-factory (ex works) excluding VAT. The information and prices contained in this price list may change at any time at the sole discretion and decision of Roger Technology.

TERMS OF DELIVERY

All products are delivered ex factory Roger Technology S.r.l at the plant in S. Botticelli, 8-31021 - Bonisiolo di Mogliano Veneto - TV - Italy. All delivery times refer exclusively to those indicated on order confirmations to be understood tentatively and with no obligation, and any delay does not entitle the customer to request the termination of all or any part of the contract, to refuse delivery or to claim damages. The delivery obligation is satisfied by written notice by Roger Technology to the client with a "products ready for shipment". Roger Technology S.r.l. reserves the right to extend the delivery terms or to terminate the supply agreement without any obligation of compensation in all cases of force majeure such as weather, earthquakes, strikes, fires, the impossibility of procurement of raw material, incorrect reporting or delay by the customer in the transmission of information necessary for order and failure to comply with terms of payment by the customer or any other event beyond our control.

SHIPPING AND PRODUCT RECALL

The delivery is carried out through written communication to the Reseller with a "products ready for shipment". Transportation costs and the cost of insurance if applicable are therefore charged to the customer. In the event that, by virtue of a specific agreement, the Manufacturer is responsible to provide for the transportation of products to the warehouse of the client, or to other destinations indicated by the reseller, the costs will be charged to the customer resulting in invoices attached to orders including the insurance costs of the Product, unless the customer does not declare in writing that one does not intend to insure the goods, taking upon himself all risks.
The customer is obliged to collect the goods as soon as they have been made available to him through communication of "products ready for shipment" or any other type of activity or communica-tion. In case of delay in the collection of the Products by the customer, Roger Technology will have the right not just to ask for full payment of the price but also the reimbursement of storage or parking excluding damages compensation. From the notice of "products ready for shipment" the risk for each fortuitous event is transferred to the customer.

WARRANTY

All products in the price list are carefully checked and tested by Roger Technology thanks to its internal business model. Roger Technology guarantees all of its branded products Roger Technology or any other own brand against defects of material used or manufactured in accordance with the installation and use conditions & limits specified by Roger Technology. The Roger Technology warranty period offered to customers is 36 months for the mechanical and electrical part and 24 months for all the electronic parts, from the date of manufacturing of each Roger Technology brand product or any other own mark in accordance with current regulations to protect consumers.
The warranty is limited solely to the total or partial repair or replacement of the product considered faulty in the opinion of the internal Customer Service of Roger Technology, excluded, therefore, from the warranty is any preconception, expense or damage of any kind incurred by the customer. In no event is Roger Technology responsible for problems resulting from the incorrect installation of the products. It is absolutely understood that all products that are replaced, during repair activities remain the property of Roger Technology. All installations by the customer must be made with the full knowledge and technical skills needed and appropriate to carry out the installation in a work-manlike manner observing correctly all the mounting and electrical connection instructions in accordance with applicable laws in force at the time of the installation.

Roger Technology assumes no liability in the event of non-compliance with mounting and electrical con-nection instructions or electrical regulations and other specific rules in force at the time of the installation, especially in cases where mechanical or electrical accessories or components of Roger Technology are installed, used and connected without a careful observance of schemes and types of connection for which were designed. At the same time Roger Technology assumes no liability for the use or application of the products for purposes that are not appropriate to the nature, scope and level of ability.
Roger Technology assumes no responsibility in the event of connection, association, or interaction of its products with others not supplied by Roger Technology. In fact, the customer is required to apply Roger Technology products only in combination with other brand products of Roger Technology. Otherwise, the warranty will not be valid, this also applies if the user fails to report the defect within the time allowed or if the parts returned as defective, have been tampered with or otherwise
repaired.

COMPLAINTS AND PRODUCT DEFECTS

Any claims for merchandise shortages or failures or defects visible from external inspection of packages should be detected as soon as the goods are received and communicated to Roger Techno-logy, no later than 7 days after delivery by written notice and photographic documentation must be sent to Roger Technology together with the relevant documentation, DDT for EU countries and invoice for countries outside the EU.

Any claims for defects of conformity of the goods which are not detectable from external examina-tion of packages should be communicated to the customer service internal to Roger Technology through email to support@rogertechnology.it with related documentation.
Refunds of goods without prior consent in writing by Roger Technology are not accepted, also any type of claim can never give rise to the annulment of all or part of the order, much less to the delay or suspen-sion of payment which will nevertheless always be made in full.

TRANSFER OF OWNERSHIP

Roger Technology retains title to the goods sold until full payment of the same, then it is agreed that the transfer of ownership of the Products sold and orders must be implemented at the same time of total payment of sales invoices. In the event of non-payment, Roger Technology can resume the immediate possession of the products sold anywhere.

TERMS OF PAYMENT

All payments must be made exclusively to Roger Technology and carried out the terms and condi-tions indicated in the invoice.
In the event that the customer does not comply with the terms of payment agreed between the Parties, Roger Technology will charge interest for late payment of trade receivables to the extent
currently regulated by Legislative Decree n. 231 of 2002, or possibly one that will regulate the matter, and this without any formal notice or communication. In the case in which are provided
payments in several instalments, or are planned advances and in general in case of late payment to an agreed maturity date by the customer, Roger Technology may suspend the execution of the order or later and further orders. The payments, even if they have different causal indicated by the client, in each case can be attributed to unpaid invoices. Roger Technology may also suspend the execution of orders where is ascertained the substantial change in the structure and/or shareholder of the client, as well as in cases of elevation of protests, enforcement measures or insolvency, emissions of injunctions of payments, suspension deferrals or delays in the fulfilment of obligations to third-party creditors. In the case of total non-payment, the sale may be terminated as of right at any time with a simple written notice by Roger Technology to the client, stating the use of this clause and without the need for any judicial form. All goods delivered and not paid shall be returned to Roger Technolo-gy, through the means of Roger Technology or other transports at the expense of the client.

TRADEMARK

The client acknowledges that Roger Technology is the exclusive owner of the trademarks and any other rights of industrial and intellectual property on products as well as catalogues, brochures, internet communication and any other material and documentation related. Any resulting goodwill is exclusively owned by Roger Technology.
The client is fully aware that Roger Technology products are covered by patents and subject to industrial know-how and design exclusive property of Roger Technology.
It is expressly forbidden for the client to violate such rights owned by Roger Technology or in any case remove, conceal or alter any trademark or other distinguishing marks affixed to the products as well as to put new one of any kind. Unless authorized in writing by Roger Technology, it is forbidden any form of reproduction or use of the Roger Technology trademark or any other distinctive mark on the products.

ACCREDITATIONS

The Roger Technology products show in the appropriate documentation, the necessary data identification of accreditations obtained. Familiarity and compliance with any regulations governing the use of radio controls and equipment are burden on the installer and the user who performs the installation.

EXCEPTIONS

At the time of signing the contract or order confirmation the client accepts these conditions of sale. Any changes thereto must be signed by Roger Technology before signing the order, which is valid in any case for each contract.

JURISDICTION

For any dispute that may arise during the course of the contract and individual sales contracts governed by the same, shall be exclusively settled by the Court of Treviso.

Manufacturing Plant

Assembly and quality Plant

Engeenring & Training Center

Sales department and Warehouse

AZIENDA ITALIANA

A company soul full of passion and close to your needs

Roger Technology was founded by a group of people with an extreme passion and desire to create revolutionary products for the gate and home automation industry. We challenge ourselves constantly and believe that a simple idea can give life to brilliant new products that will set the standard for the gate and home automation industry in the future.

Roger Technology S.r.l.
Manufacturing Plant
Via S. Botticelli, 8 - 31021
Bonisiolo di Mogliano Veneto (tv)
italia

Sales Department
and Warehouse
Via S. Botticelli, 5 - 31021
Bonisiolo di Mogliano Veneto (tv)
Italia

phone. +39 041 5937023
fax +39 041 5937024
info@rogertechnology.com
www.rogertechnology.com

WELCOME TO OUR B2B AREA

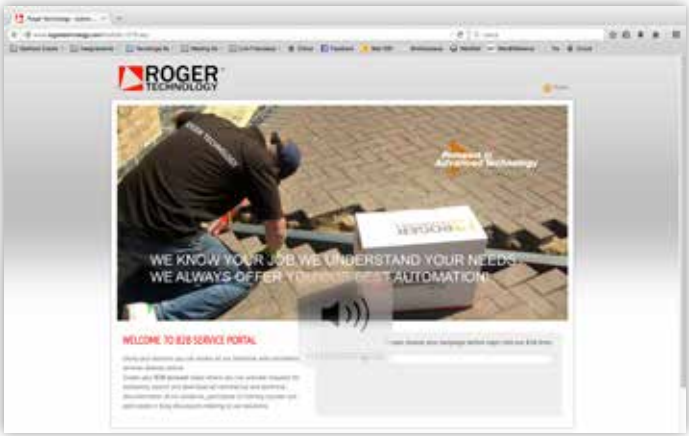

To register or login into our online customer service:
WWW.ROGERTECHNOLOGY.COM/B2B
To discover our national and international:
WWW.ROGERTECHNOLOGY.COM/DEALERS

ROGER®
BRUSHLESS

AZIENDA
ITALIANA

PASSION POINT/DEALER

WWW.WEAREBRUSHLESS.COM

ROGER TECHNOLOGY
Via S. Botticelli, 8 - 31021, Bonisiolo di Mogliano Veneto (TV) - ITALY
T. +39 041 5937023 - F. +39 041 5937024
info@rogertechnology.it

WWW.ROGERTECHNOLOGY.COM

grafica :: mfrancesca.com
02/15